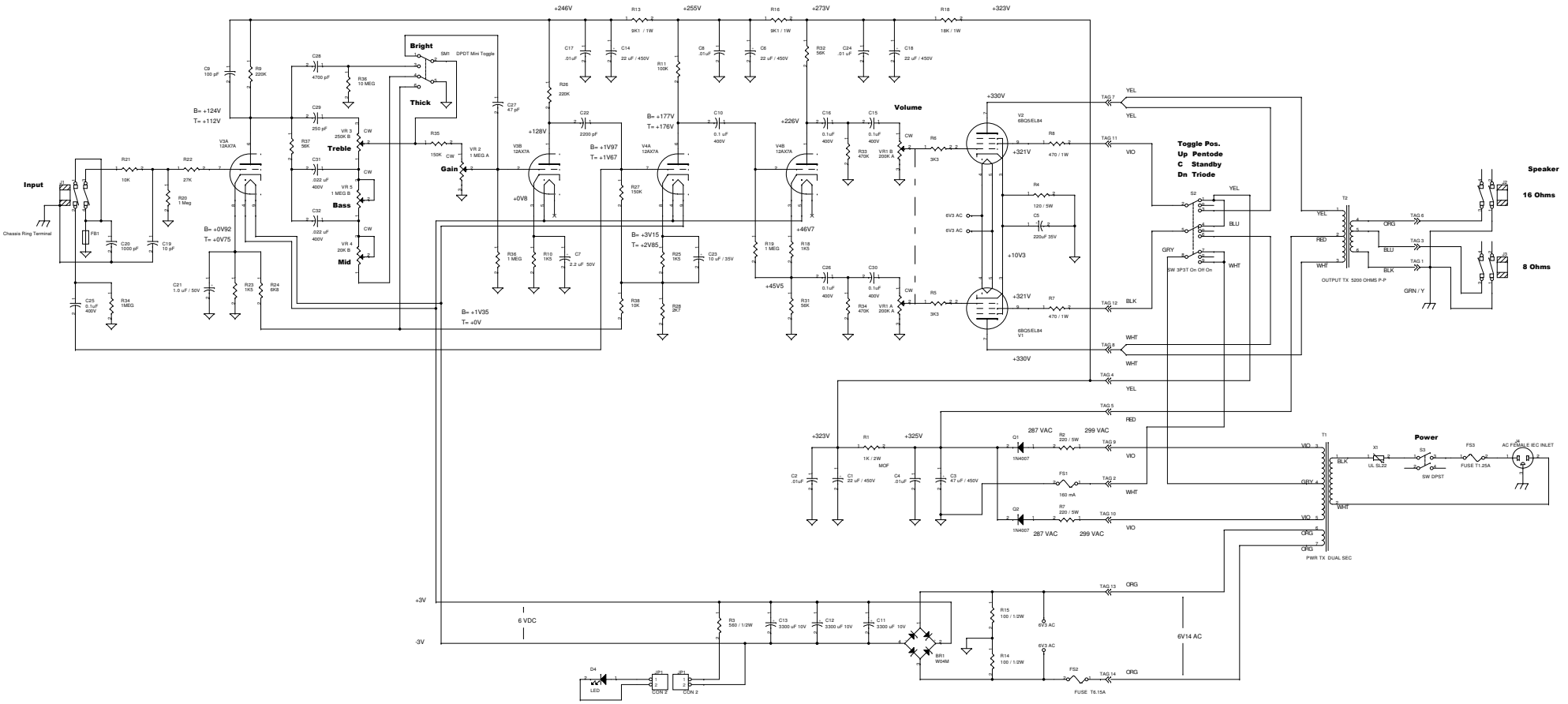

NOTES;

All voltages measured in Pentode Mode

AC inlet voltage held constant at 120VAC 60 Hz for measurements

No signal applied. Gain and Volume set at Minimum CCW

B = Bright mode voltage T= Thick Mode voltage

Title	VOX Night Train NT-15
Size D	Document Number PCB_NT15H_1001_ISS2
Rev C	
Date: Friday, August 14, 2009	Sheet 1 of 1